Notice Pied de SNACK

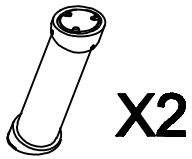

X2

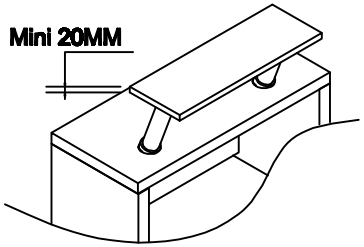

No.	Designation	Description :	Qty
A		Screw M10 x 60mm	x2
B		Screw 4.5x25mm	x2
C		Screw 4.5x35mm	x4
D		Allen key 2.5mm	x1
E		Allen key 5mm	x1
F		Flat spacer M10	x2
G		Spring spacer M10	x2
H		Hexagonal Nut M10	x2

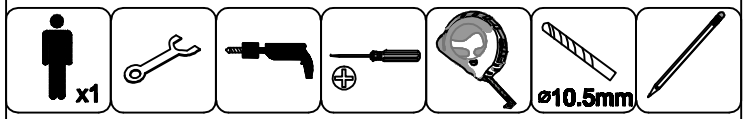

Step 1

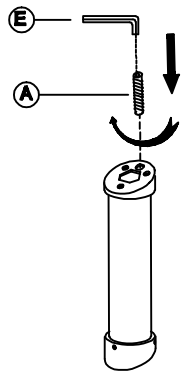

Step 2

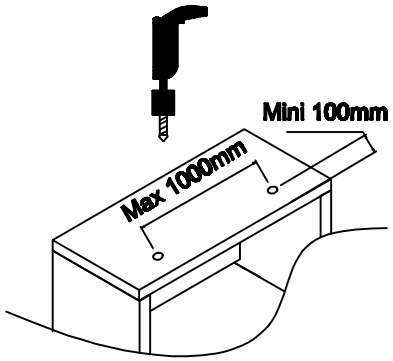

Step 3

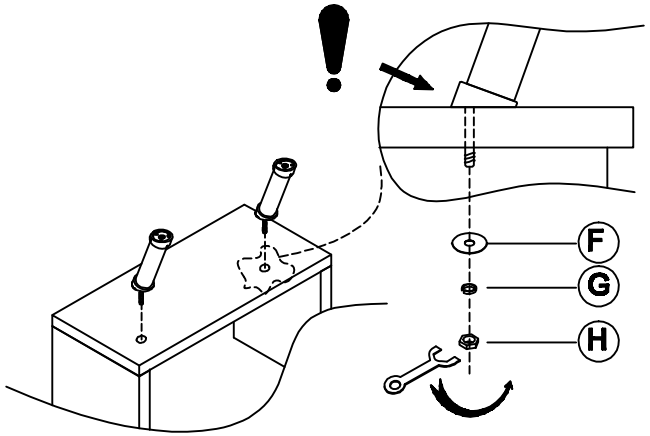

Step 4

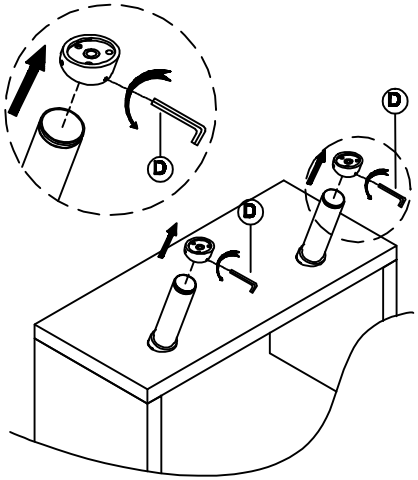

Step 5

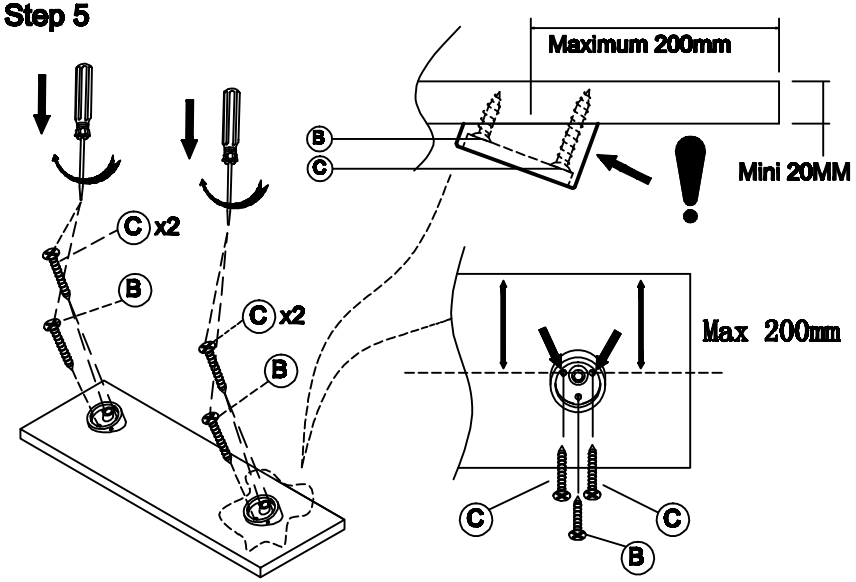
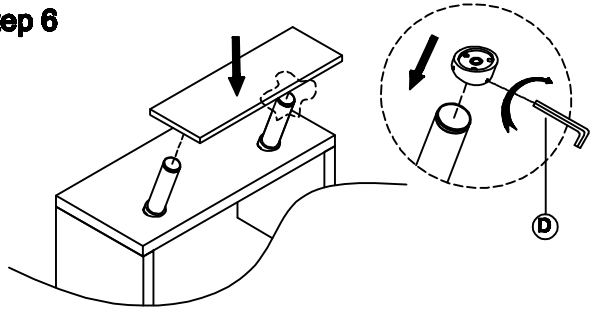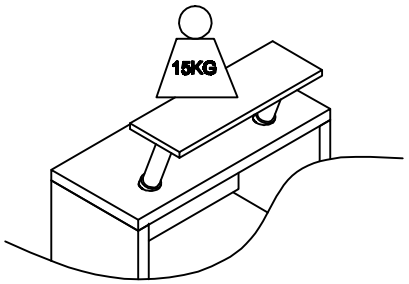
Step 6