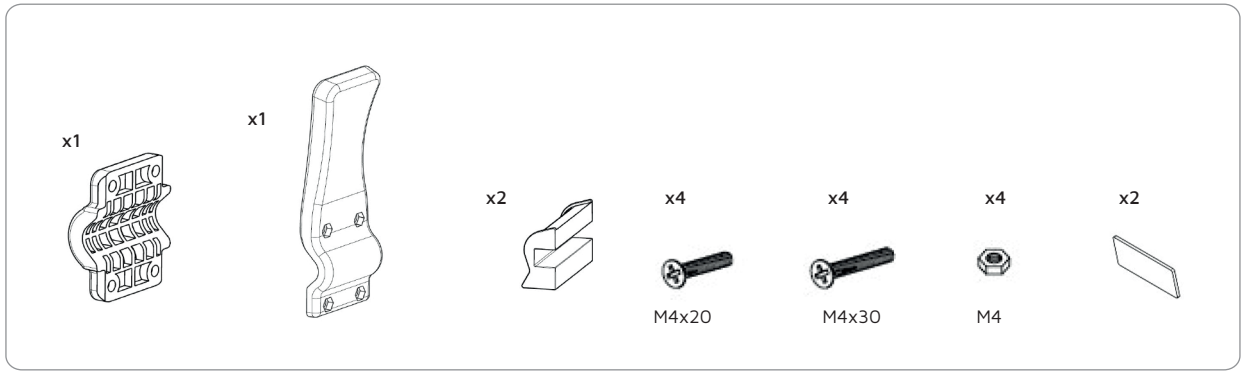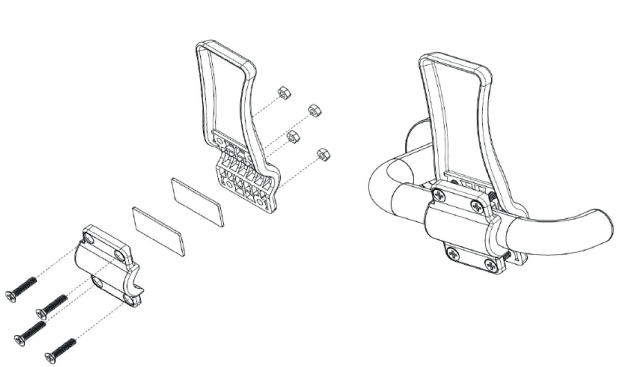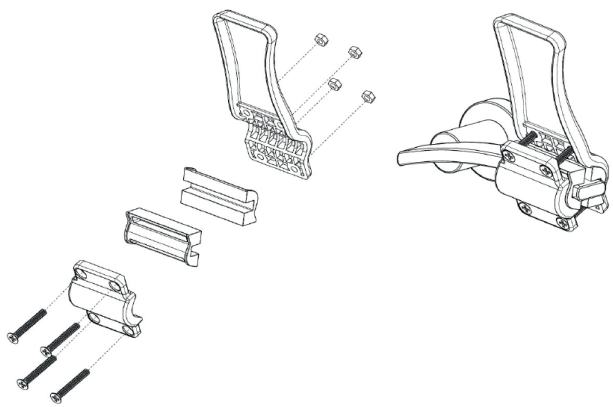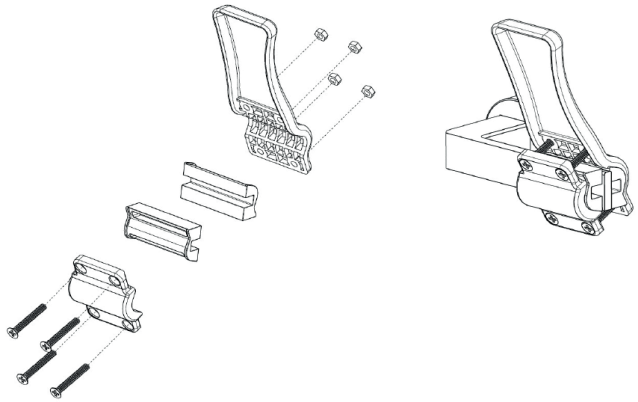emuca
furniture fittings solutions